SolarPocketLight (c) 2015 by Malte Marwedel

Creative Common, Namensnennung, Non commercial (CC BY-NC 3.0 DE)
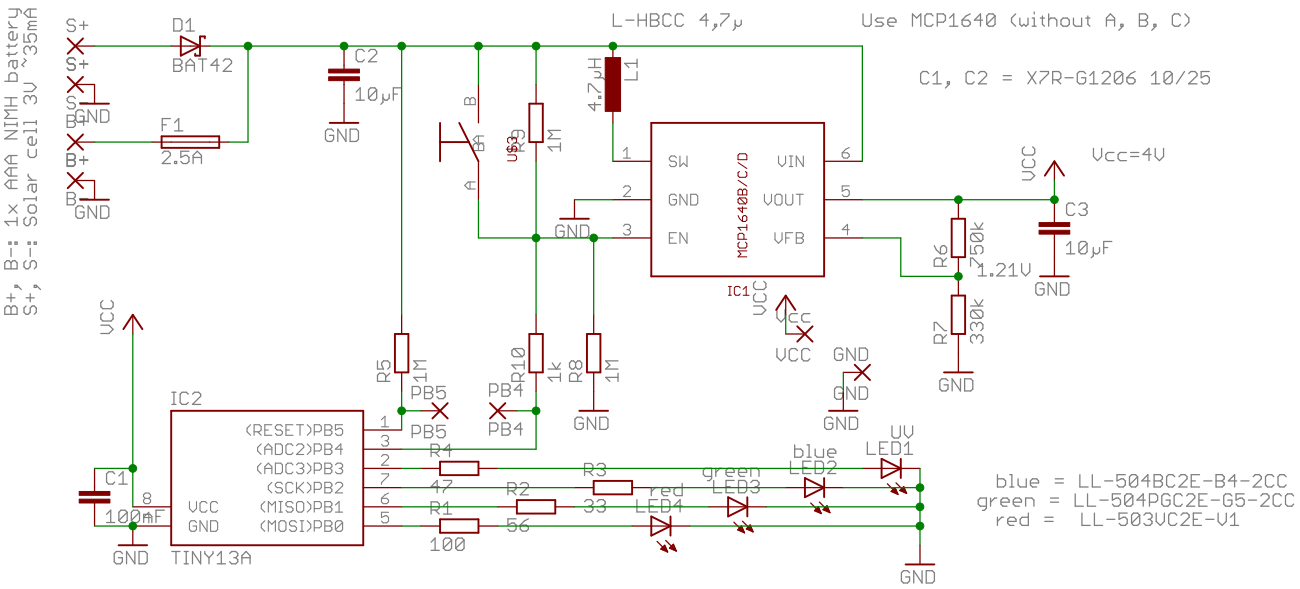
Version 1.0